AXOR®

DOOR LINE DL

DOOR LINE DL

Door Line is a product line of door locks. Like all AXOR products, door locks are characterized by:

- reliability and durability in the operation of all the elements;
- the strength of high-quality materials, of which all the components are made;
- unique protective surface coating that ensures high resistance to corrosion.

Closed, all-steel case of AXOR Door Line DL locks creates a finished aesthetic look of design and ensures all its components protection against ingress of dust and debris into the mechanism.

Door Line DL product range includes:

- multi-point mortise locks;
- short one-point locks
- locks for bathroom doors;
- lock for aluminium doors;
- multi-point door lock;
- locks double sash doors;
- door hinge 3D PVC;
- lock cylinders;
- door handle sets.

rev. 4.00.00
29.09.2026

Easy changing of the door swing direction

Roller latch in the door lock accounts for direction of door's opening. Door lock of AXOR was made in such way that direction of door's opening can be changed. Detailed instructions for changing the opening direction are described on page 5.

Door casing extension

AXOR Door Line DL product range includes locks with a possibility of casing «extension» along the sash perimeter allowing you to install additional locking elements, which will ensure tight pressing of the door leaf against the frame and improve general structural integrity.

The possibility of using push handle sets with 3 screw holes

The design of AXOR Door Line DL locks allows you to use push handle sets with three fixing points (European standard) that allows you to securely fix the set on the door, thus ensuring longer service life.

Individual branding

AXOR Door Line DL locks have a special seat for branding by installation of a metal plate with your logo into the lock strike plate. The logo on the lock is a durable and non-standard advertising that adds distinctiveness to the product and successfully promotes your brand.

Security pins

AXOR Door Line DL locks may be fitted with mushroom pins in order to improve the lock's anti-burglar properties.

Deadbolt in AXOR Door Line DL locks

Key-operated mortise lock has a steel deadbolt. Handle-operated mortise lock and short mortise lock with a dornmass of 35 mm are fitted with a deadbolt with steel pins, thus making a door more resistant to break-in.

General data

DOOR LINE DL

Legend

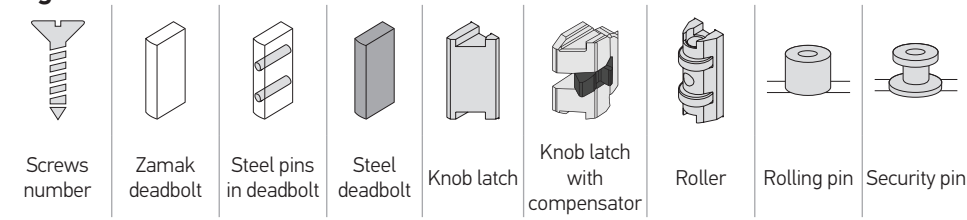

Pin adjustment

Door locking plate adjustment

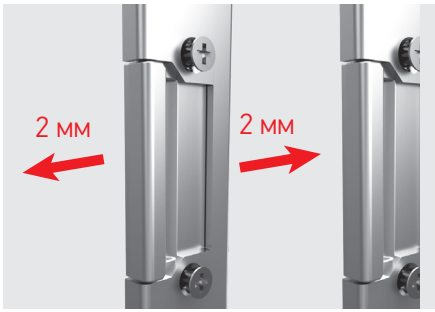

Knob latch, changing of the door swing direction

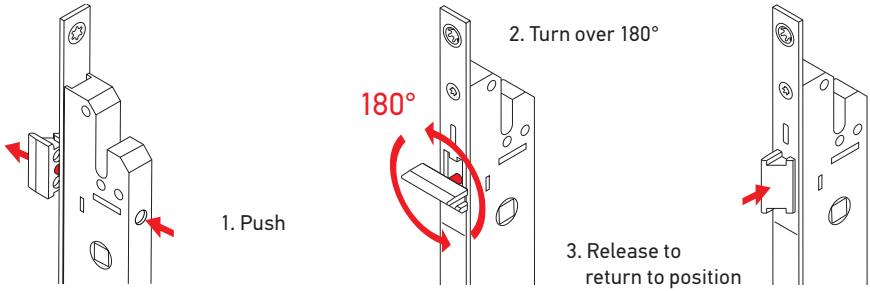

Knob latch with compensator, changing of the door swing direction

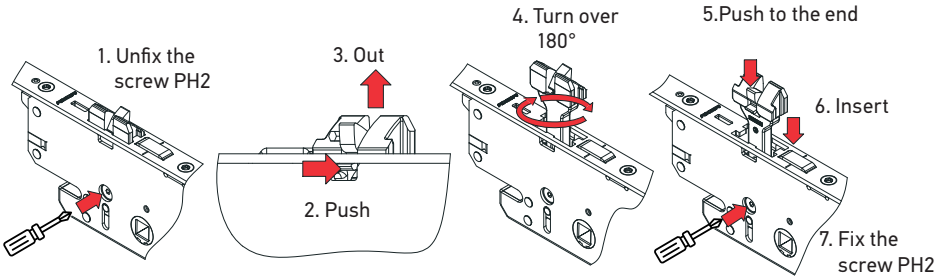

Mortise lock

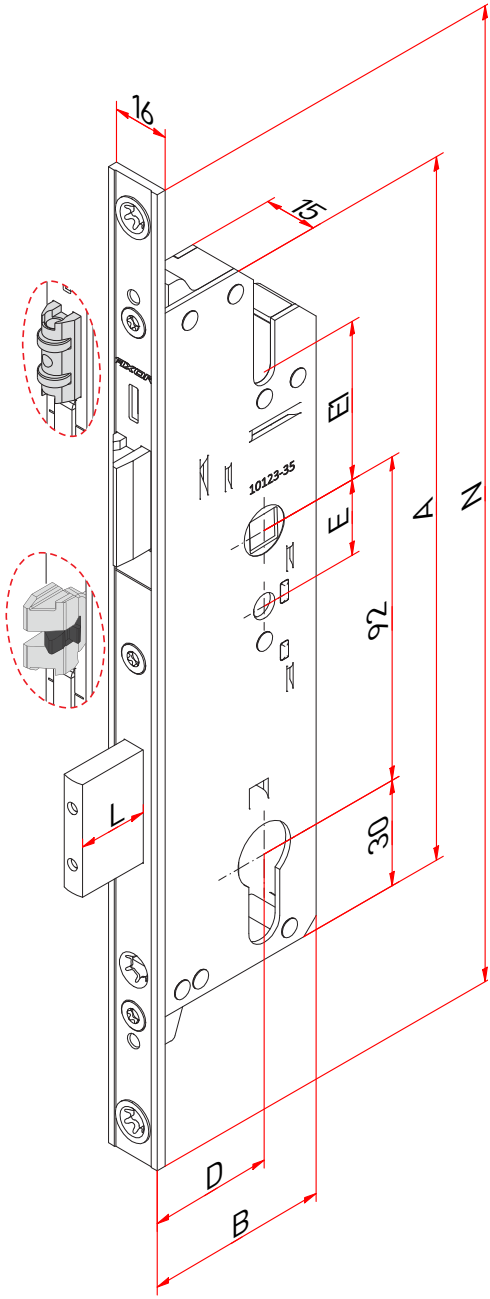

Mortise lock

DOOR LINE DL

Part No.	D	Case dimensions			Deadbolt		Latch Type	Set fixing		
		N	A	B	L	Type		E	E1	
D1001-25-N03	25	278	200	43	13,5			21,5	45	2
D1001-35-N03	35	278	200	53	20			21,5	45	2
D1001-45-N03	45	278	200	63	20			21.5	45	2
D1015-35-N03	35	278	200	53	20			—	—	2

D — dornmass N — double vent length L — deadbolt projection

Key-operated

European standard

Latch
(direction change)

Branding

Mortise lock
for aluminium doors

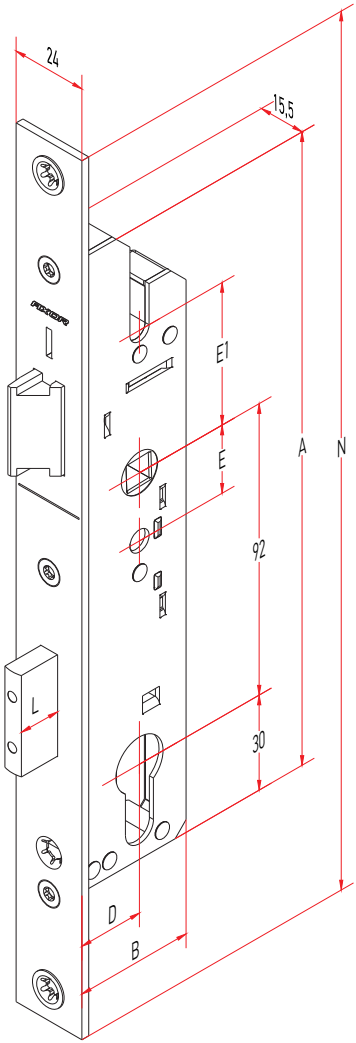

Key-operated

European standard

Latch
(direction change)

Branding

Part No.	D	Case dimensions			Deadbolt		Latch Type	Set fixing		
		N	A	B	L	Type		E	E1	
D1029-25-N03	25	278	200	43	13,5			21,5	45	2
D1029-35-N03	35	278	200	53	20			21,5	45	2

D — dornmass N — double vent length L — deadbolt projection

Mortise lock
for aluminium doors

DOOR LINE DL

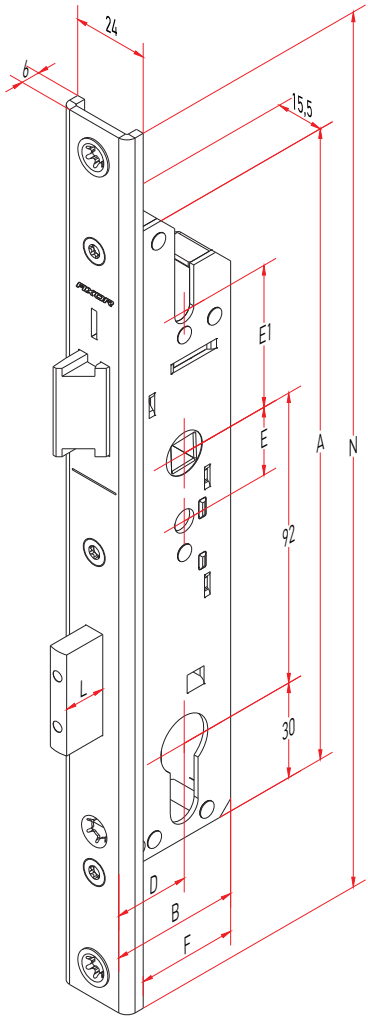

Key-operated

European standard

Latch
(direction change)

Branding

Part No.	D	Case dimensions				Deadbolt		Latch Type	Set fixing		
		N	A	B	F	L	Type		E	E1	
D1030-25-N03	25	278	200	43	37	13,5			21,5	45	2
D1030-35-N03	35	278	200	53	47	20			21,5	45	2

D — dornmass N — double vent length L — deadbolt projection

Mortise lock, 35/92 roller latch, 24 mm

Used on aluminum doors as the main fixing and locking element.

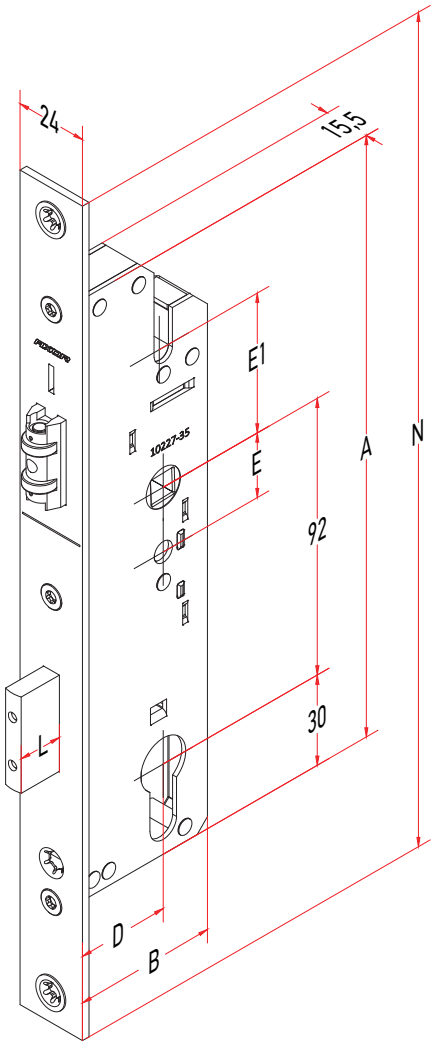

Key-operated

European standard

Branding

Part No.	D	Case dimensions			Deadbolt		Latch Type	Set fixing		
		N	A	B	L	Type		E	E1	
D1035-35-N03	35	278	200	53	20			21,5	45	2

D — dornmass N — double vent length L — deadbolt projection

Mortise lock, 35/92 roller latch, 6x24x6 mm

DOOR LINE DL

Used on aluminum doors as the main fixing and locking element.

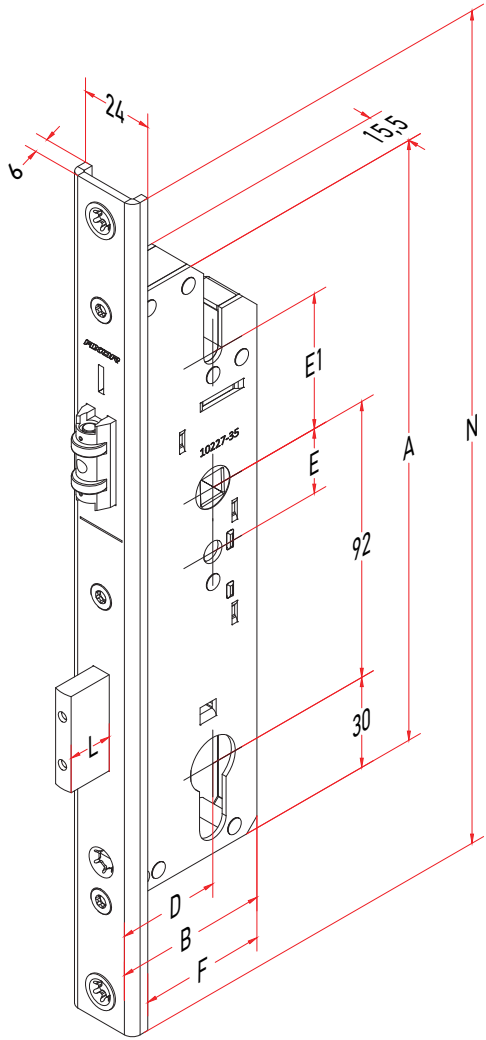

Key-operated

European standard

Branding

Part No.	D	Case dimensions				Deadbolt		Latch Type	Set fixing		
		N	A	B	F	L	Type		E	E1	
D1036-35-N03	35	278	200	53	47	20			21,5	45	2

D — dornmass N — double vent length L — deadbolt projection

Mortise lock, 25/35 | 92, 24 mm (without latch)

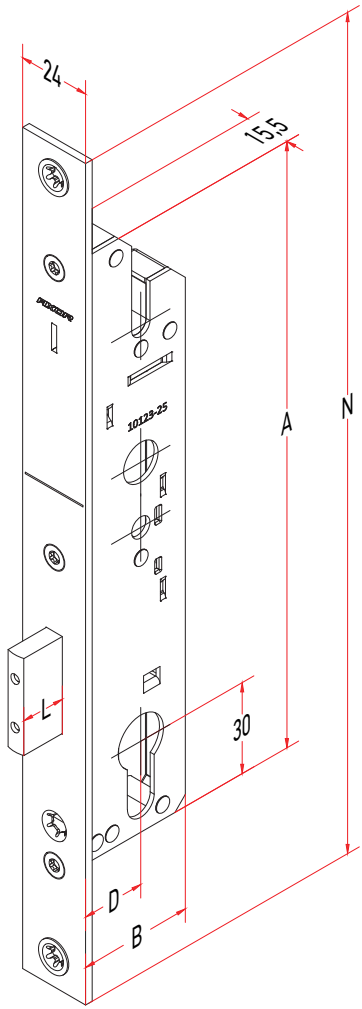

Key-operated

European standard

Branding

Used on aluminum doors as an additional locking element that ensures safety and increased protection against breakage.

Part No.	D	Case dimensions			Deadbolt		
		N	A	B	L	Type	
D1037-25-N03	25	278	200	43	13,5		2
D1037-35-N03	35	278	200	53	20		2

D — dornmass N — double vent length L — deadbolt projection

Mortise lock, 25/35 | 92, 6x24x6 mm (without latch)

DOOR LINE DL

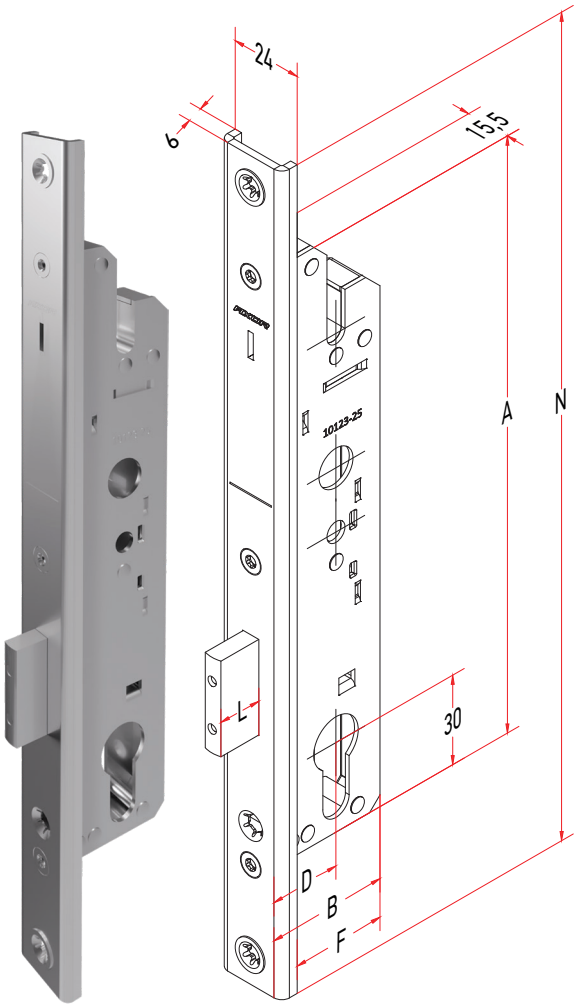

Key-operated

European standard

Branding

Used on aluminum doors as an additional locking element that ensures safety and increased protection against breakage.

Part No.	D	Case dimensions				Deadbolt		
		N	A	B	F	L	Type	
D1038-25-N03	25	278	200	43	37	13,5		2
D1038-35-N03	35	278	200	53	47	20		2

D — dornmass N — double vent length L — deadbolt projection

Mortise lock WC

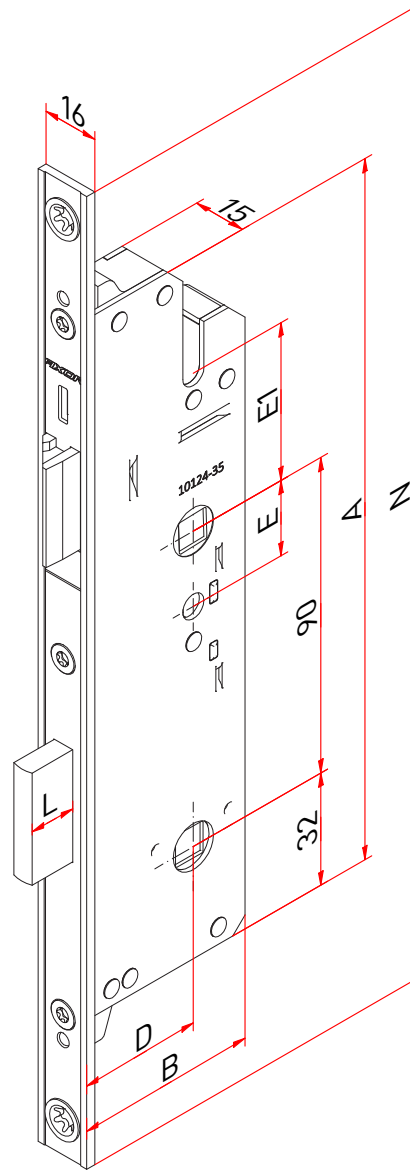

Mortise lock WC

DOOR LINE DL

Part No.	D	Case dimensions			Deadbolt		Latch Type	Set fixing		
		N	A	B	L	Type		E	E1	
D1002-25-N03	25	278	200	43	13,5			21,5	45	2
D1002-35-N03	35	278	200	53	13,5			21,5	45	2

D — dornmass N — double vent length L — deadbolt projection

European standard

Latch
(direction change)

Branding

Multi-point door lock, handle-operated

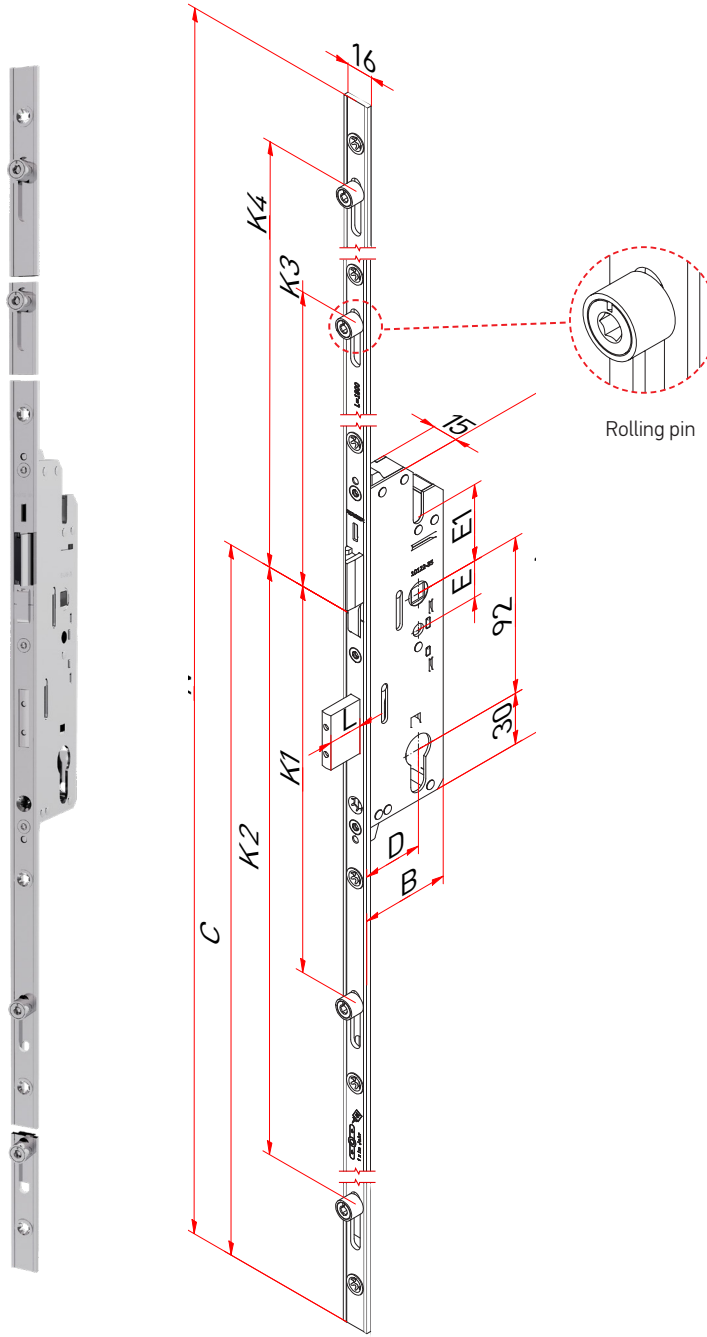

Multi-point door lock, handle-operated

Part No.	Application range	D	Case dimensions				Deadbolt		Latch	Locking pins arrangement				Set fixing			Pin
			N	A	B	C	L	Type	Type	K1	K2	K3	K4	E	E1		
D1003-25-N03	1600-1800	25	1600	200	43	1000	13,5			228	928	547	-	21,5	45	8	
D1003-35-N03	1600-1800	35	1600	200	53	1000	20			228	928	547	-	21,5	45	8	
D1004-25-N03	1801-2000	25	1800	200	43	1000	13,5			228	928	347	747	21,5	45	9	
D1004-35-N03	1801-2000	35	1800	200	53	1000	20			228	928	347	747	21,5	45	9	
D1005-25-N03	2001-2100	25	2000	200	43	1000	13,5			228	928	347	947	21,5	45	10	
D1005-35-N03	2001-2100	35	2000	200	53	1000	20			228	928	347	947	21,5	45	10	

D — dornmass N — double vent length L — deadbolt projection

Handle-operated

European standard

Latch (direction change)

Security pin

Branding

Multi-point door lock, key-operated

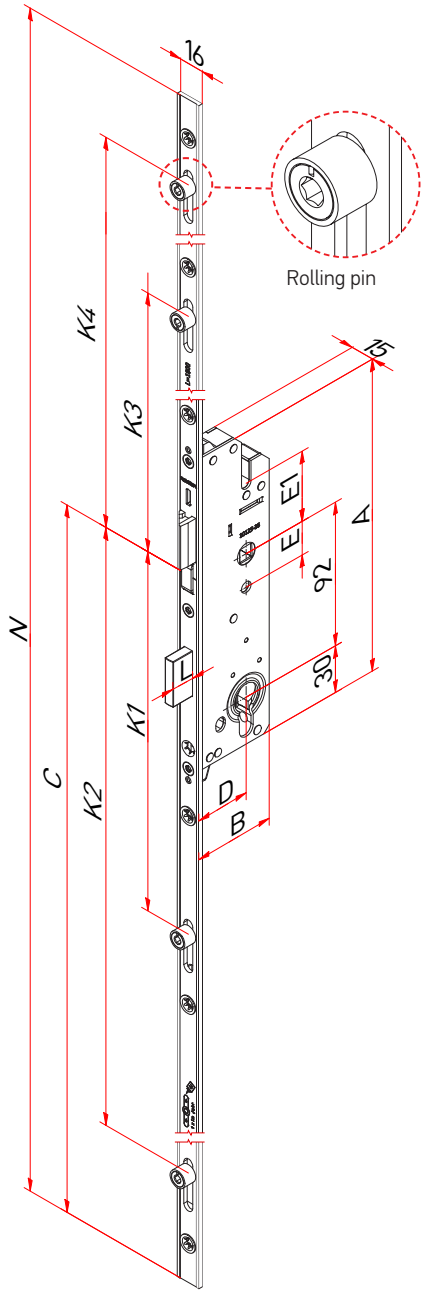

Multi-point door lock, key-operated

Part No.	Application range	D	Case dimensions				Deadbolt		Latch	Locking pins arrangement				Set fixing			Pin
			N	A	B	C	L	Type	Type	K1	K2	K3	K4	E	E1		
D1007-35-N03	1600-1800	35	1600	200	53	1000	14,5			230	930	545	-	21,5	45	8	
D1008-35-N03	1801-2000	35	1800	200	53	1000	14,5			230	930	345	745	21,5	45	9	
D1009-35-N03	2001-2100	35	2000	200	53	1000	14,5			230	930	345	945	21,5	45	10	

D — dornmass N — double vent length L — deadbolt projection

Key-operated

European standard

Latch
(direction change)

Security pin

Branding

Multi-point door lock, key-operated

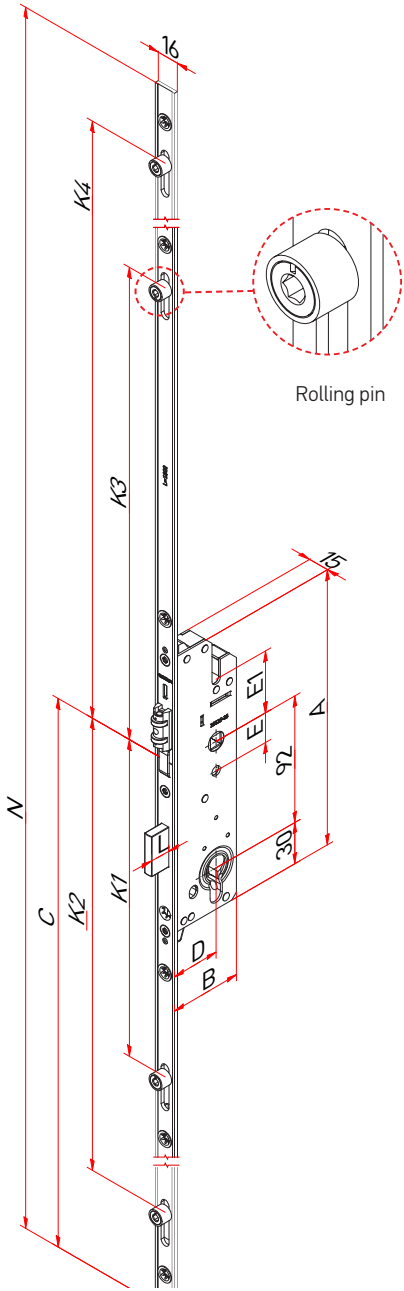

Multi-point door lock, key-operated

Part No.	Application range	D	Case dimensions				Deadbolt		Latch	Locking pins arrangement				Set fixing			Pin
			N	A	B	C	L	Type	Type	K1	K2	K3	K4	E	E1		
D1011-35-N03	1600-1800	35	1600	200	53	1000	14,5			230	930	545	-	21,5	45	8	
D1012-35-N03	1801-2000	35	1800	200	53	1000	14,5			230	930	345	745	21,5	45	9	
D1013-35-N03	2001-2100	35	2000	200	53	1000	14,5			230	930	345	945	21,5	45	10	

D — dornmass N — double vent length L — deadbolt projection

Key-operated

European standard

Security pin

Branding

Multi-point door lock, handle-operated

(with additional gear connections and the possibility of connection with a corner transmission)

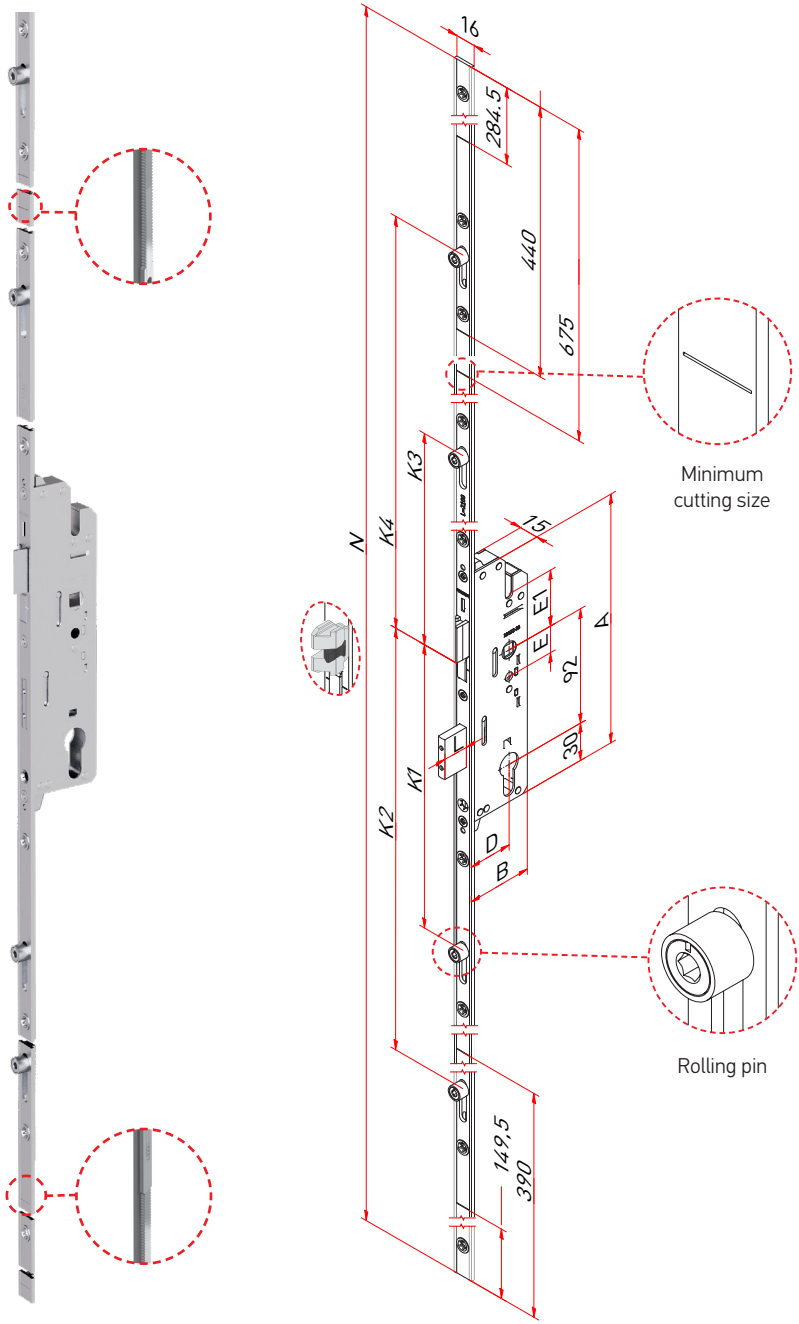

Multi-point door lock, handle-operated

(with additional gear connections and the possibility of connection with a corner transmission)

DOOR LINE DL

Part No.	D	Case dimensions			Deadbolt		Latch Type	Locking pins arrangement				Set fixing			Pin
		N	A	B	L	Type		K1	K2	K3	K4	E	E1		
D1031-25-N03	25	2100	200	43	13,5			228	756	272	722	21,5	45	11	
D1031-35-N03	35	2100	200	53	20			228	756	272	722	21,5	45	11	
D1031-40-N03	40	2100	200	58	20			228	756	272	722	21.5	45	11	
D1031-45-N03	45	278	200	63	20			228	756	272	722	21.5	45	11	

D — dornmass N — double vent length L — deadbolt projection
Application range subject to extension: 1575 - 2730 mm.

Handle-operated

European standard

Latch
(direction change)

Branding

Multi-point door lock, key-operated

35/92 mm backsetwith additional part for extension

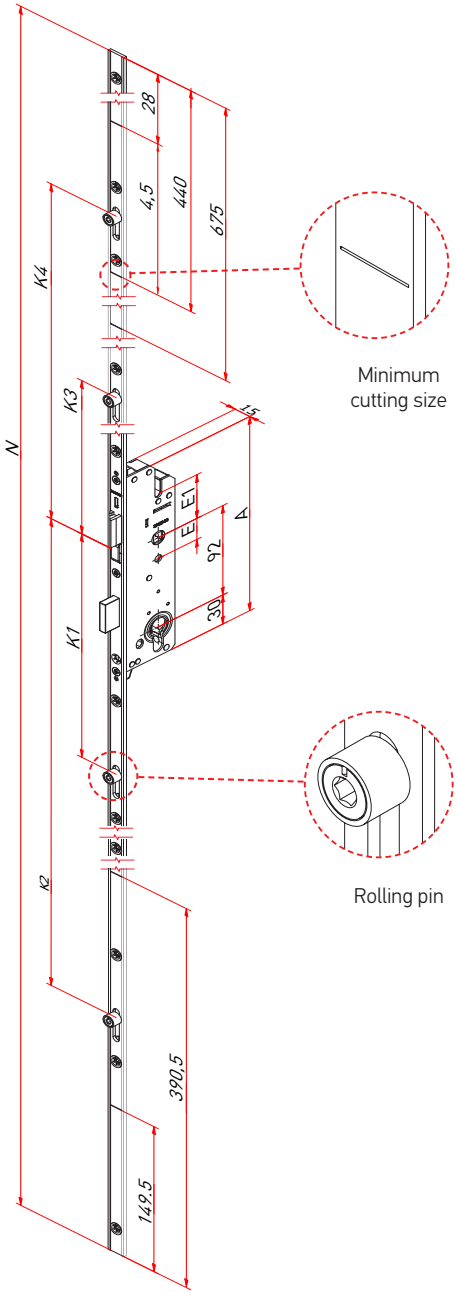

Multi-point door lock, key-operated

35/92 mm backsetwith additional part for extension

DOOR LINE DL

Part No.	D	Case dimensions			Deadbolt		Latch Type	Locking pins arrangement				Set fixing			Pin
		N	A	B	L	Type		K1	K2	K3	K4	E	E1		
D1040-35-N03	35	2100	200	53	14,5			230	758	270	720	21,5	45	11	
D1044-35-N03	35	2100	200	53	14,5			230	758	270	720	21,5	45	11	

D — dornmass N — double vent length L — deadbolt projection
Application range subject to extension: 1575 - 2730 mm.

Key-operated

European standard

Latch
(direction change)

Branding

Extendable multi-point door lock, handle-operated

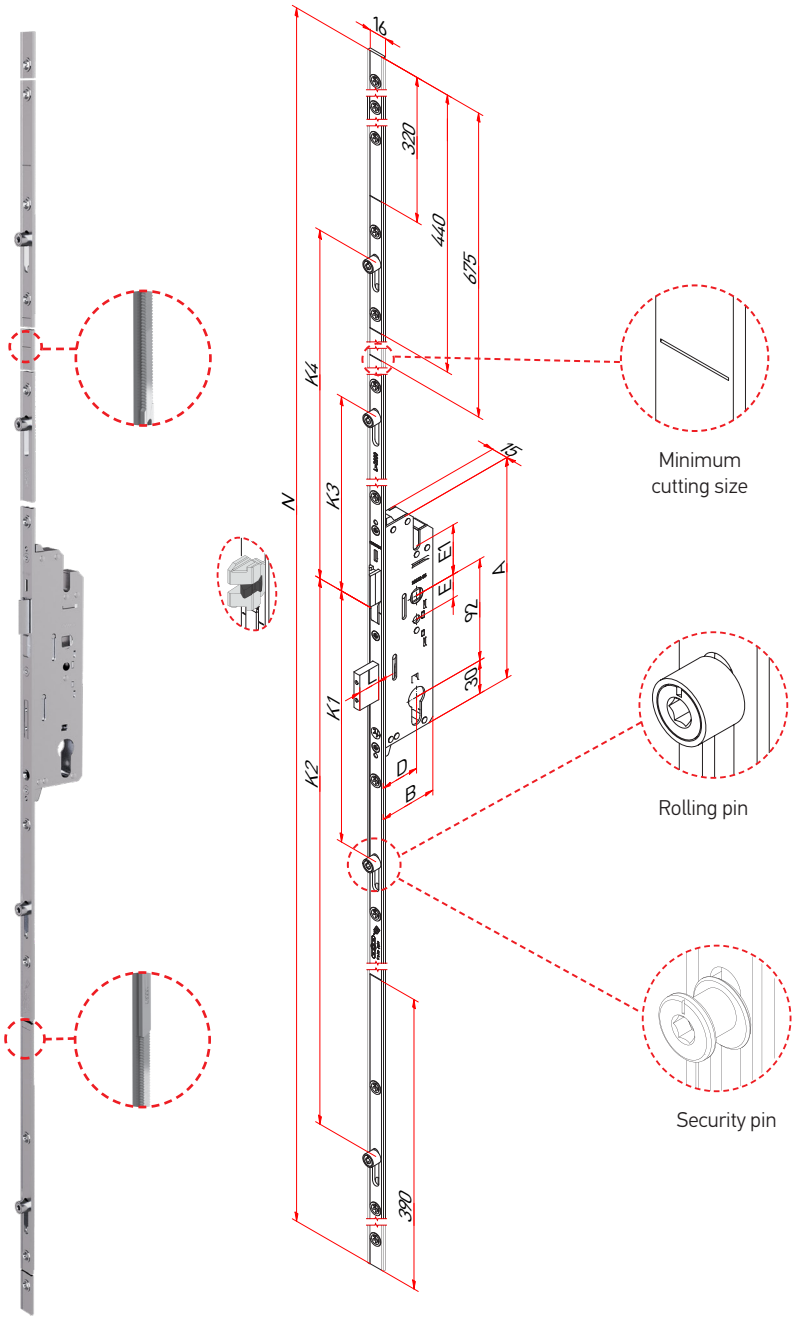

Extendable multi-point door lock, handle-operated

DOOR LINE DL

Part No.	D	Case dimensions			Deadbolt		Latch Type	Locking pins arrangement				Set fixing			Pin
		N	A	B	L	Type		K1	K2	K3	K4	E	E1		
D1006-25-N03	25	2100	200	43	13,5			228	773	272	722	21,5	45	13	
D1006-35-N03	35	2100	200	53	20			228	773	272	722	21,5	45	13	
D1006-45-N03	45	2100	200	63	20			228	773	272	722	21.5	45	13	
D1016-25-N03	25	2100	200	43	13,5			228	773	272	722	21,5	45	13	
D1016-35-N03	35	2100	200	53	20			228	773	272	722	21,5	45	13	

D — dornmass N — double vent length L — deadbolt projection
Application range subject to extension: 1685 - 2400 mm.

Handle-operated

European standard

Latch
(direction change)

Branding

Set for double sash doors (entrance group)

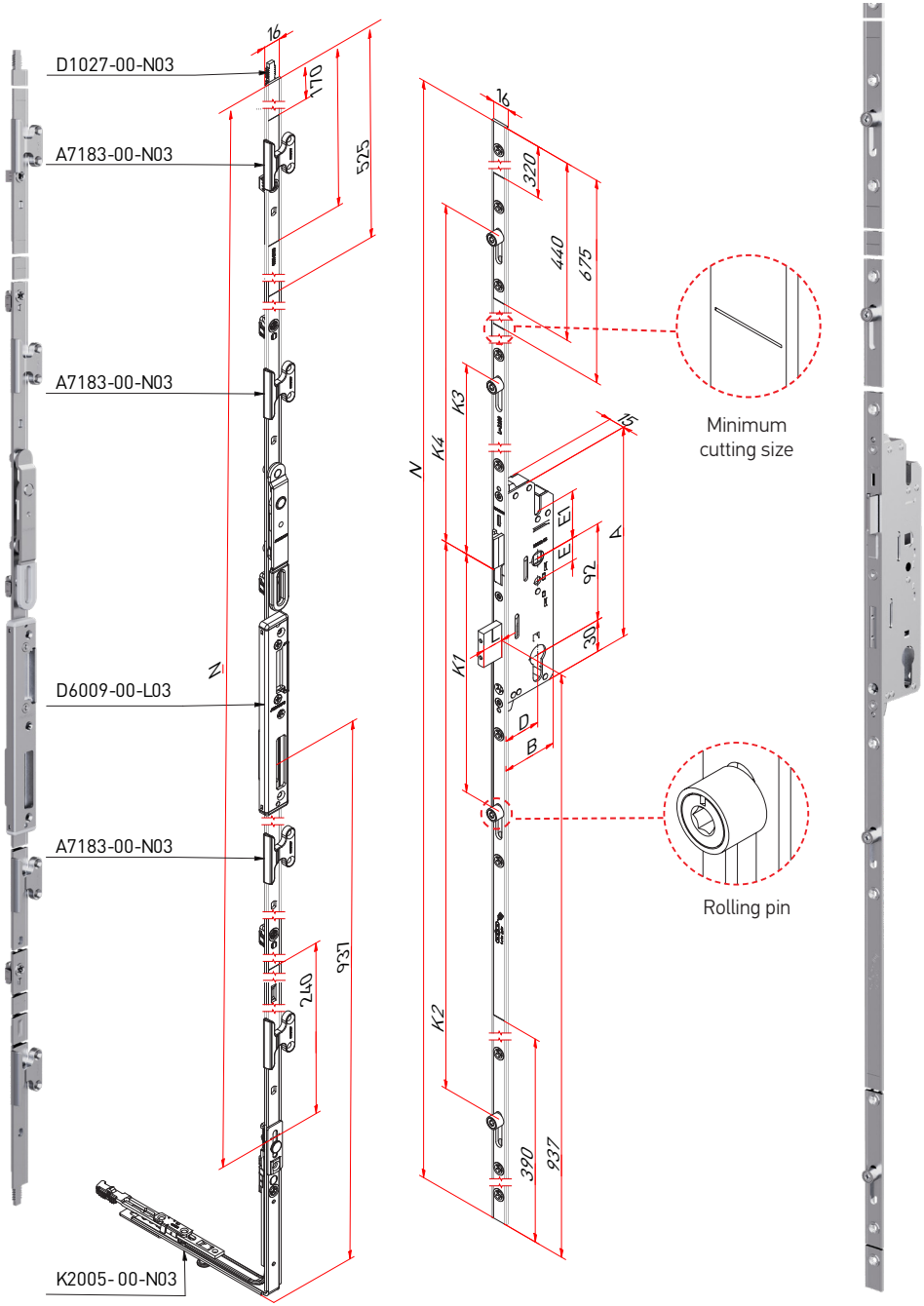

Set for double sash doors (entrance group)

DOOR LINE DL

Extendable multi-point door lock, handle-operated

Part No.	D	Case dimensions			Deadbolt		Latch Type	Locking pins arrangement				Set fixing			Pin
		N	A	B	L	Type		K1	K2	K3	K4	E	E1		
D1026-25-N03	25	2100	200	43	13,5			226	771	272	723	21,5	45	12	
D1026-35-N03	35	2100	200	53	20			226	771	272	723	21,5	45	12	

Double sash lever door

Part No.	N
D1027-00-N03	1800

D — dornmass N — double vent length L — deadbolt projection

Handle-operated

European standard

Latch
(direction change)

Branding

Set for double sash doors (entrance group)

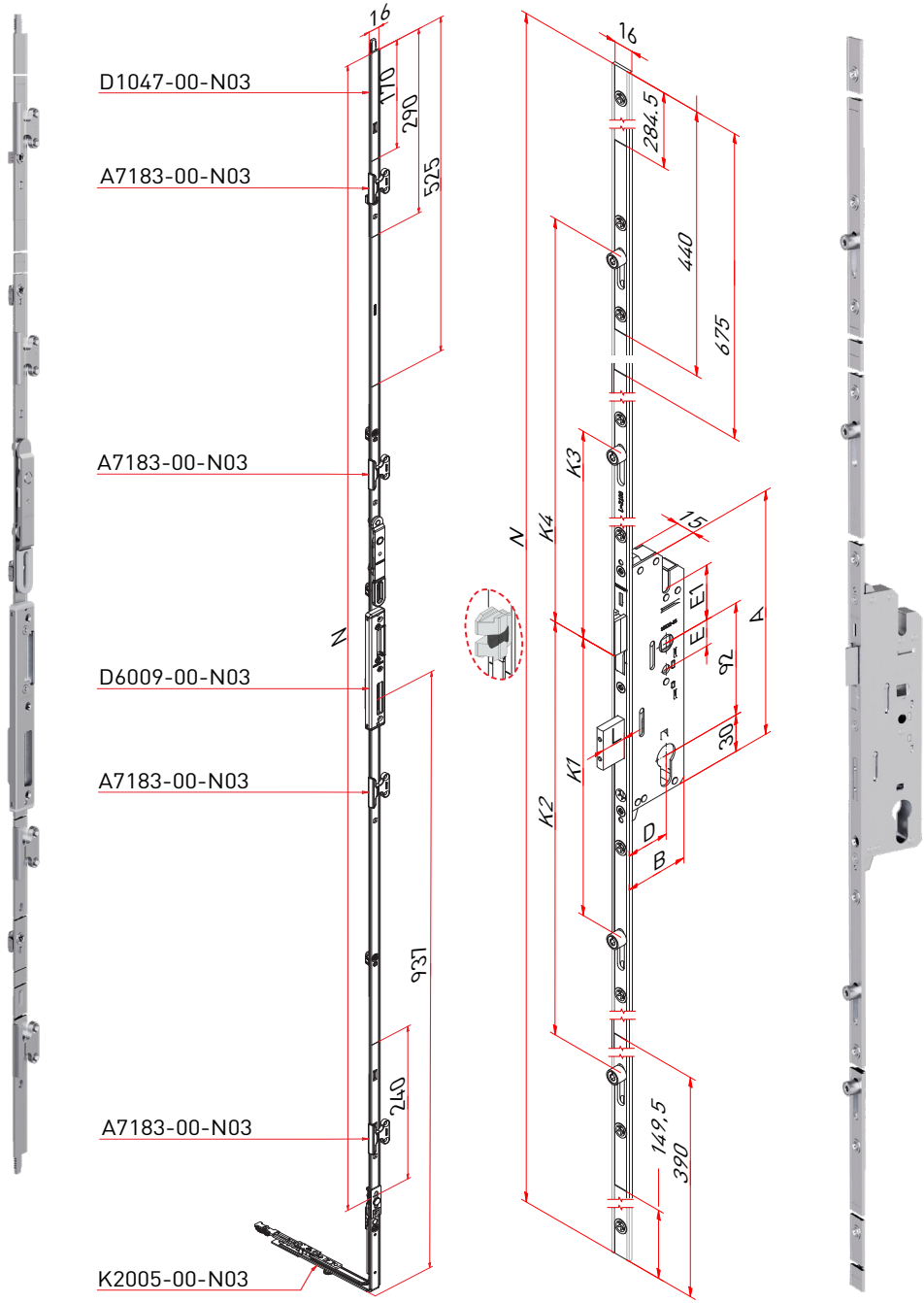

Set for double sash doors (entrance group)

Part No.	D	Case dimensions			Deadbolt		Latch Type	Locking pins arrangement				Set fixing			Pin
		N	A	B	L	Type		K1	K2	K3	K4	E	E1		
D1031-25-N03	25	2100	200	43	13,5			228	756	272	722	21,5	45	11	
D1031-35-N03	35	2100	200	53	20			228	756	272	722	21,5	45	11	

Double sash lever door

Part No.	N
D1047-00-N03	1800

D — dornmass N — double vent length L — deadbolt projection

Handle-operated

European standard

Latch
(direction change)

Branding

Extendable multi-point door lock, key-operated

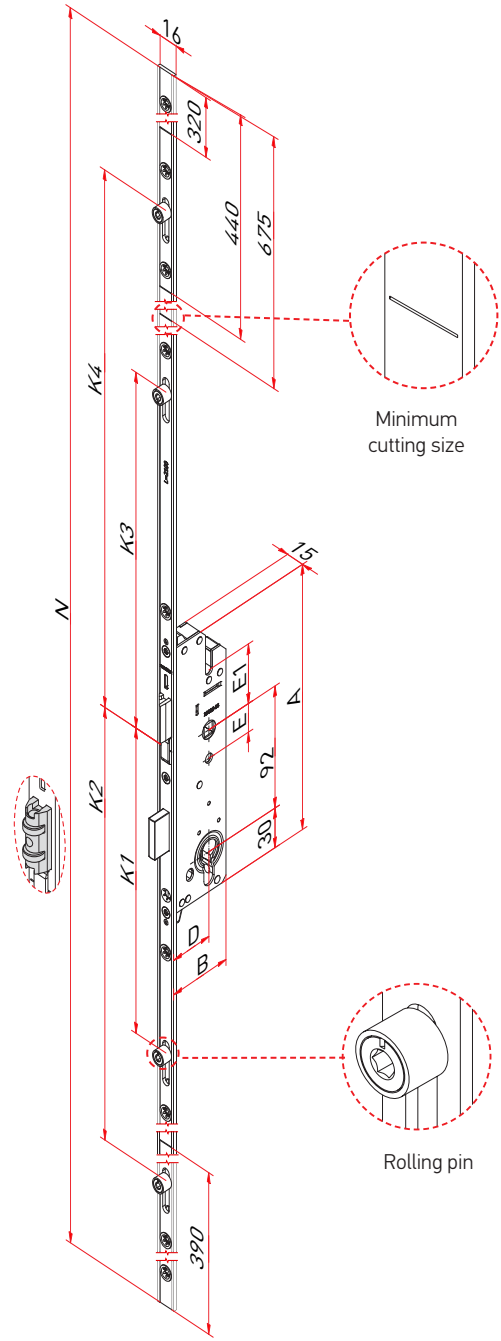

Extendable multi-point door lock, key-operated

DOOR LINE DL

Part No.	D	Case dimensions			Deadbolt		Latch Type	Locking pins arrangement				Set fixing			Pin
		N	A	B	L	Type		K1	K2	K3	K4	E	E1		
D1010-35-N03	35	2100	200	53	14,5			230	775	270	720	21,5	45	13	
D1014-35-N03	35	2100	200	53	14,5			230	775	270	720	21,5	45	13	
D1028-35-N03	35	2100	200	53	14,5			230	775	270	720	21,5	45	13	

D — dornmass N — double vent length L — deadbolt projection
Application range subject to extension: 1685 - 2400 mm.

Key-operated

European standard

Latch
(direction change)

Security pin

Branding

Hardware for extendable multi-point door locks

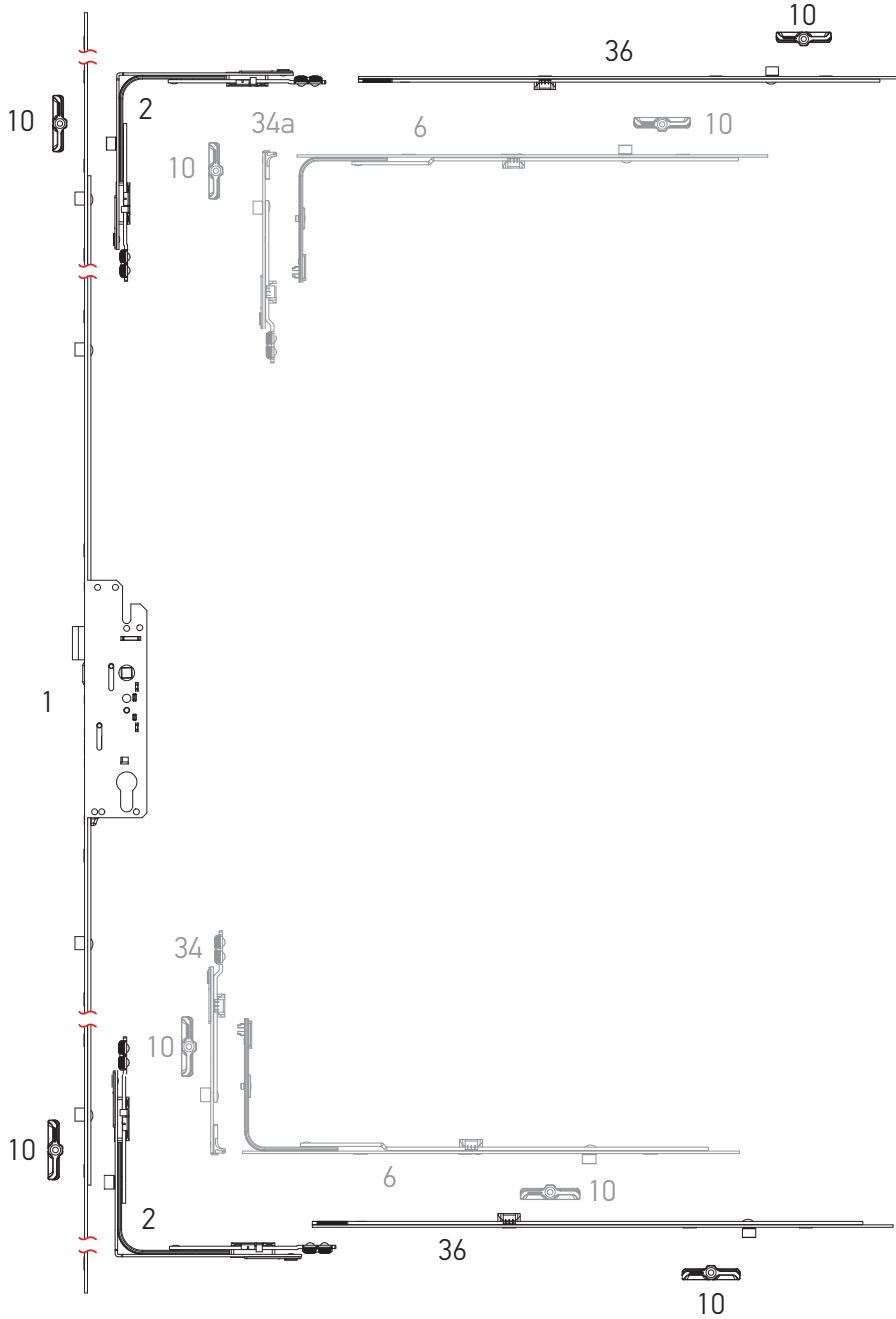

Hardware for extendable multi-point door locks

DOOR LINE DL

№	Description	Application range by width	Application range by height	Part No.
1	Extendable multi-point door lock, handle-operated	–	1685-2400	D1006-25-N03
	Extendable multi-point door lock, handle-operated	–	1685-2400	D1006-35-N03
	Extendable multi-point door lock, handle-operated	–	1685-2400	D1016-25-N03
	Extendable multi-point door lock, handle-operated	–	1685-2400	D1016-35-N03
	Extendable multi-point door lock, key-operated, with latch	–	1685-2400	D1010-35-N03
	Extendable multi-point door lock, key-operated, with a roller	–	1685-2400	D1014-35-N03
2	Corner transmission 150x150	330-1280	450-2390	K2001-00-N03
6	Middle lock L=400, 1 ML	600-1000	–	K4001-04-N03
	Middle lock L=650, 1 ML	850-1250	–	K4001-06-N03
10	Locking plate	–	–	*
34	Bottom extension for turn sash 90°	–	–	K4007-00-N03
34a	Bottom extension for turn sash 180°	–	–	K4011-00-N03
36	Extension lock for corner transmission L=480 mm	–	–	K4010-00-N03

* – look at the technical catalog KOMFORT LINE K-3 "Profile-depending elements" section

Door locking plate

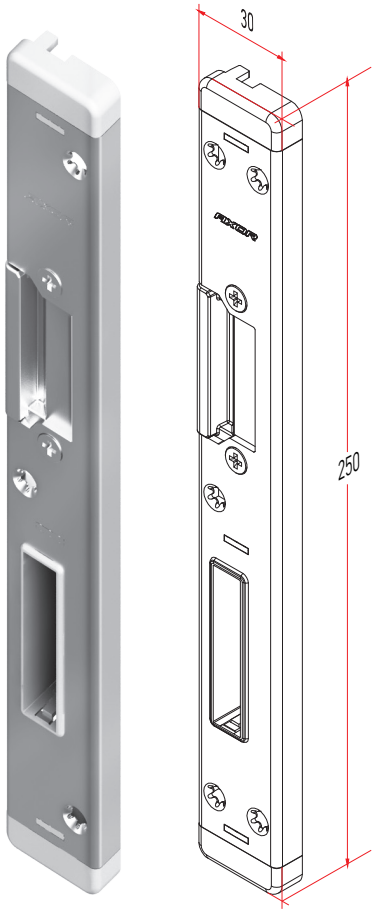

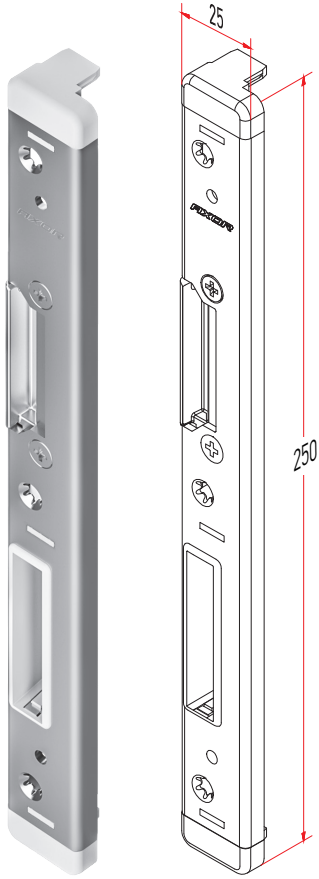

Part No.	Compatible profile
D6001-13-L03 \ D6001-13-R03	WDS, Veka, Aluplast
D6002-13-L03 \ D6002-13-R03	KBE, Gealan
D6003-13-L03 \ D6003-13-R03	Rehau
D6004-13-L03 \ D6004-13-R03	Wintech 532
D6005-13-L03 \ D6005-13-R03	Deceuninck
D6006-09-L03 \ D6006-09-R03	KBE
D6008-13-L03 \ D6008-13-R03	Double sash
D6009-00-L03 \ D6009-00-R03	Double sash

Door locking plate for aluminium doors

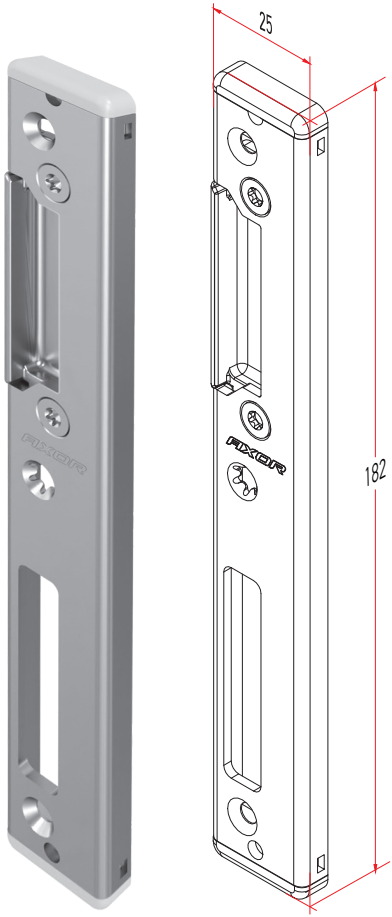

Part No.	Name
D6014-00-L03	Door locking plate for aluminium doors, left
D6014-00-R03	Door locking plate for aluminium doors, right

Door hinge 3D PVC Sentinel 160

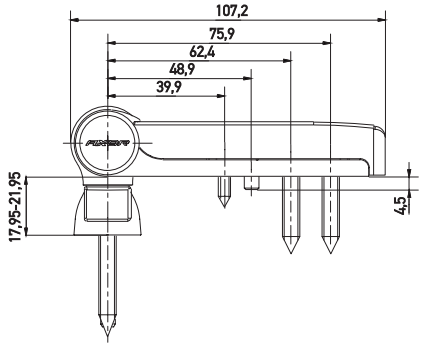

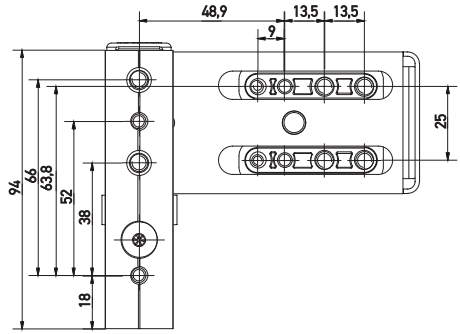

Drilling jig for 3D hinge

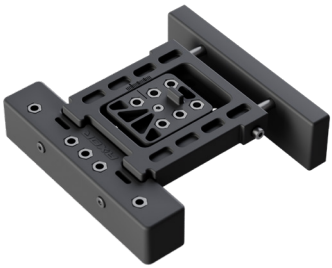

Door hinge 3D PVC Sentinel 160

DOOR LINE DL

Part No.	Maximum sash weight	Application range by sash overlap	Color (RAL)	Number of screws, pcs.
D5002-18-N01M	160 kg	16-20 mm	White RAL9016 matte	8
D5002-20-N01M		18-22 mm		
D5002-22-N01M		20-24 mm		
D5002-18-N02M	160 kg	16-20 mm	Brown RAL8022 matte	8
D5002-20-N02M		18-22 mm		
D5002-22-N02M		20-24 mm		
D5002-18-N03	160 kg	16-20 mm	Silver	8
D5002-20-N03		18-22 mm		
D5002-22-N03		20-24 mm		
D5002-18-N07M	160 kg	16-20 mm	Black RAL9005 matte	8
D5002-20-N07M		18-22 mm		
D5002-22-N07M		20-24 mm		
D5002-18-N09M	160 kg	16-20 mm	Anthracite RAL7016 matte	8
D5002-20-N09M		18-22 mm		
D5002-22-N09M		20-24 mm		
D5002-18-N15	160 kg	16-20 mm	Gold	8
D5002-20-N15		18-22 mm		
D5002-22-N15		20-24 mm		
D5002-18-N16	160 kg	16-20 mm	Bronze matte	8
D5002-20-N16		18-22 mm		
D5002-22-N16		20-24 mm		

Drilling jig for 3D hinge

Part No.	Tool	Packaging
A7077-00-N03	Ø5 dril	5

Distance plate for 3D hinge

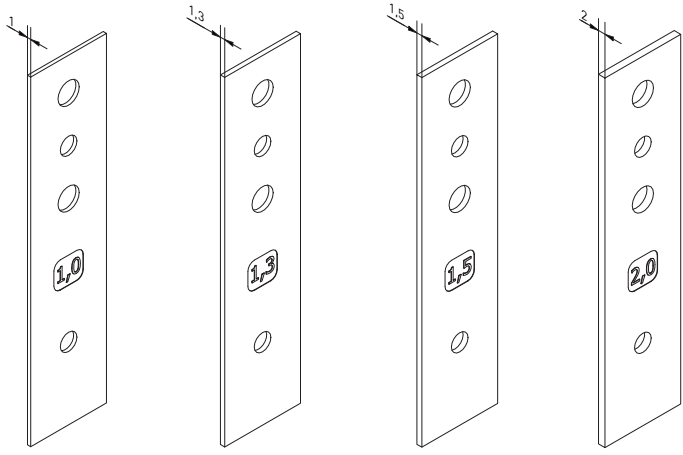

Distance plate for 3D hinge

DOOR LINE DL

Part No.	Thickness, mm	Color (RAL)
D9005-01-N01	1,0	White RAL9016
D9005-02-N01	1,3	
D9005-03-N01	1,5	
D9005-04-N01	2,0	
D9005-01-N02	1,0	Brown RAL8022
D9005-02-N02	1,3	
D9005-03-N02	1,5	
D9005-04-N02	2,0	
D9005-01-N03	1,0	Silver
D9005-02-N03	1,3	
D9005-03-N03	1,5	
D9005-04-N03	2,0	
D9005-01-N07	1,0	Black RAL9005
D9005-02-N07	1,3	
D9005-03-N07	1,5	
D9005-04-N07	2,0	
D9005-01-N09	1,0	Anthracite RAL7016
D9005-02-N09	1,3	
D9005-03-N09	1,5	
D9005-04-N09	2,0	
D9005-01-N15	1,0	Gold
D9005-02-N15	1,3	
D9005-03-N15	1,5	
D9005-04-N15	2,0	
D9005-01-N16	1,0	Bronze matte
D9005-02-N16	1,3	
D9005-03-N16	1,5	
D9005-04-N16	2,0	

Shoot bolt for door

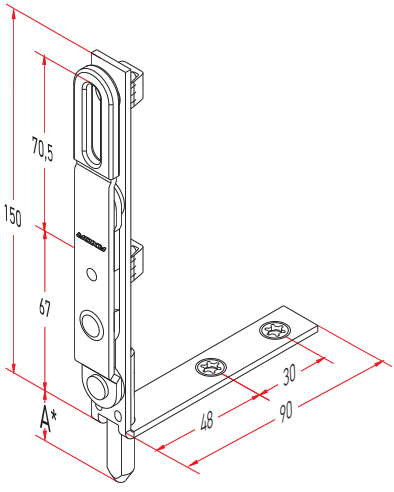

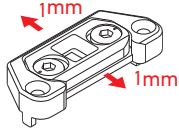

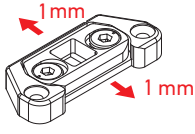

Part No.	Name	A*, mm
K4016-00-N03	Shoot bolt for door 22 mm	22
K4043-00-N03	Shoot bolt for door 18 mm	18
K6018-13-N03	Shoot bolt locking plate13 mm.	–
K6019-13-N03	Shoot bolt locking plate for aluminium doorstep 13 mm.	–

*A -Pin protrusion length

Brass lock cylinders

Part No.	Type
D7001-80-N03	40x40. KEY-KEY
D7002-85-N03	40x45. KEY-KEY
D7003-90-N03	45x45. KEY-KEY
D7004-95-N03	45x50. KEY-KEY
D7005-80-N03	40x40. KEY-HANDLE
D7006-90-N03	45x45. KEY-HANDLE

Polished lock cylinders

Part No.	Type
D7007-80-N03	40x40 KEY-KEY
D7008-85-N03	40x45 KEY-KEY
D7009-90-N03	45x45 KEY-KEY
D7010-95-N03	45x50 KEY-KEY
D7011-80-N03	40x40 KEY-HANDLE
D7012-90-N03	45x45 KEY-HANDLE
D7013-90-N03	40x50 KEY-KEY

Zinc lock cylinders SKALA

Part No.	Type
SK30X30 SN	30X30 KEY-KEY
SK30X30T SN	30X30 KEY-HANDLE
SK30X35 SN	30X35 KEY-KEY
SK30X40 SN	30X40 KEY-KEY
SK40X40 SN	40X40 KEY-KEY
SK40X40T SN	40X40 KEY-HANDLE
SK40X45T SN	40X45 KEY-HANDLE
SK40X50 SN	40X50 KEY-KEY
SK40X55 SN	40X55 KEY-KEY
SK40X55T SN	40X55 KEY-HANDLE
SK40X60 SN	40X60 KEY-KEY
SK45X45 SN	45X45 KEY-KEY
SK45X45T SN	45X45 KEY-HANDLE
SK45X50 SN	45X50 KEY-KEY
SK45X60 SN	45X60 KEY-KEY
SK50X50 SN	50X50 KEY-KEY
SK50X50T SN	50X50 KEY-HANDLE

Self-tapping screw with drill

Part No.	Size, mm	Quantity per package, thousands of pcs
YHB MUV M3,9X16	3.9x16	20
YHB MUV M3,9X16 N	3.9x16	20
YHB MUV M3,9X19	3.9x19	18
YHB MUV M3,9X19 N	3.9x19	18
YHB MUV M3,9X25	3.9x25	14
YHB MUV M3,9X25 N	3.9x25	14
YHB MUV M3,9X32	3.9x32	12
YHB MUV M3,9X32 N	3.9x32	12
YHB MUV M3,9X38	3.9x38	9
YHB MUV M3,9X38 N	3.9x38	9
SK M3,9X16	3.9x16	36

Self-tapping screw

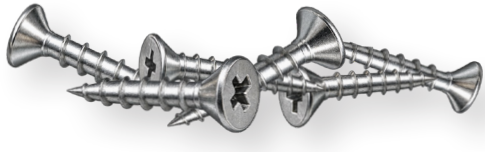

Part No.	Size, mm	Quantity per package, thousands of pcs
YHB SSB M4,0X25 N	4.0x25	18
YHB SSB M4,0X35	4.0x35	12
YHB SSB M4,0X35 N	4.0x35	12
YHB SSB M4,0X40	4.0x40	8
YHB SSB M4,0X40 N	4.0x40	8
SK M4,1X25N	4.1×25	20

N - 4 nibs under head

Door handle set WC «Carina»

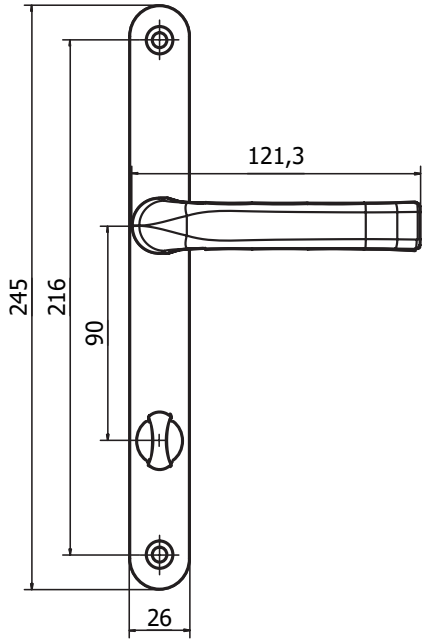

Door handle set WC «Carina»

DOOR LINE DL

Part No.	Door leaf thickness, mm	Center distance, mm	Plank width, mm	Color
D8003-90-N01M	55-62	90	26	White RAL9016 matte
D8003-90-N02M	55-62	90	26	Brown RAL8022 matte
D8003-90-N07M	55-62	90	26	Black RAL9005 matte

Door handle set «Carina», 26 mm, for a door cylinder

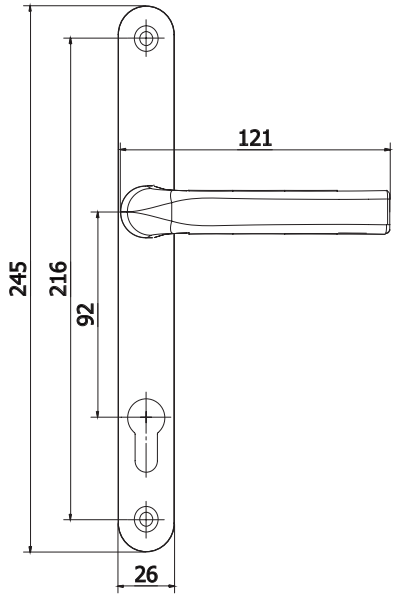

Door handle set «Carina», 26 mm, for a door cylinder

DOOR LINE DL

Part No.	Door leaf thickness, mm	Center distance, mm	Plank width, mm	Color
D8003-92-N01M	55-62	92	26	White RAL9016 matte
D8004-92-N01M	67-72	92	26	
D8005-92-N01M	75-82	92	26	
D8003-92-N02M	55-62	92	26	Brown RAL8022 matte
D8004-92-N02M	67-72	92	26	
D8005-92-N02M	75-82	92	26	
D8003-92-N03	55-62	92	26	Silver
D8004-92-N03	67-72	92	26	
D8005-92-N03	75-82	92	26	
D8003-92-N07M	55-62	92	26	Black RAL9005 matte
D8004-92-N07M	67-72	92	26	
D8005-92-N07M	75-82	92	26	
D8003-92-N09M	55-62	92	26	Anthracite RAL7016 matte
D8004-92-N09M	67-72	92	26	
D8005-92-N09M	75-82	92	26	
D8003-92-N15	55-62	92	26	Gold
D8004-92-N15	67-72	92	26	
D8005-92-N15	75-82	92	26	
D8003-92-N16	55-62	92	26	Bronze matte
D8004-92-N16	67-72	92	26	
D8005-92-N16	75-82	92	26	
D8003-92-N0901M	55-62	92	26	External Anthracite RAL7016 matte Internal White RAL9016 matte
D8004-92-N0901M	67-72	92	26	
D8005-92-N0901M	75-82	92	26	
D8003-92-N0201M	55-62	92	26	External Brown RAL8022 matte Internal White RAL9016 matte
D8004-92-N0201M	67-72	92	26	
D8005-92-N0201M	75-82	92	26	

Door handle set «Carina», 30 mm, for a door cylinder

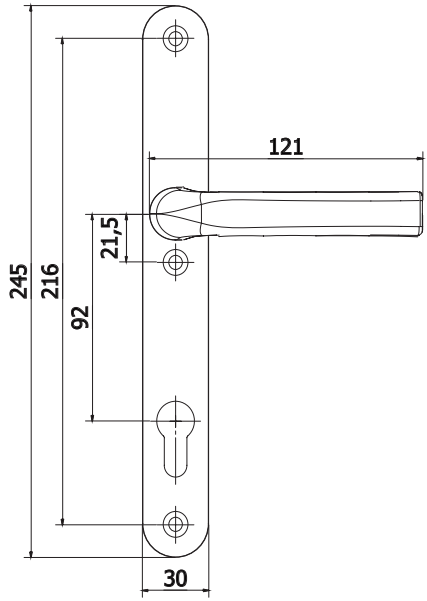

Door handle set «Carina», 30 mm, for a door cylinder

DOOR LINE DL

Part No.	Door leaf thickness, mm	Center distance, mm	Plank width, mm	Color
D8006-92-N01M	55-62	92	30	White RAL9016 matte
D8007-92-N01M	67-72	92	30	
D8008-92-N01M	75-82	92	30	
D8006-92-N02M	55-62	92	30	Brown RAL8022 matte
D8007-92-N02M	67-72	92	30	
D8008-92-N02M	75-82	92	30	
D8006-92-N03	55-62	92	30	Silver
D8007-92-N03	67-72	92	30	
D8008-92-N03	75-82	92	30	
D8006-92-N07M	55-62	92	30	Black RAL9005 matte
D8007-92-N07M	67-72	92	30	
D8008-92-N07M	75-82	92	30	
D8006-92-N09M	55-62	92	30	Anthracite RAL7016 matte
D8007-92-N09M	67-72	92	30	
D8008-92-N09M	75-82	92	30	
D8006-92-N15	55-62	92	30	Gold
D8007-92-N15	67-72	92	30	
D8008-92-N15	75-82	92	30	
D8006-92-N16	55-62	92	30	Bronze matte
D8007-92-N16	67-72	92	30	
D8008-92-N16	75-82	92	30	

Door handle set «Astrum», 30 mm, for a door cylinder

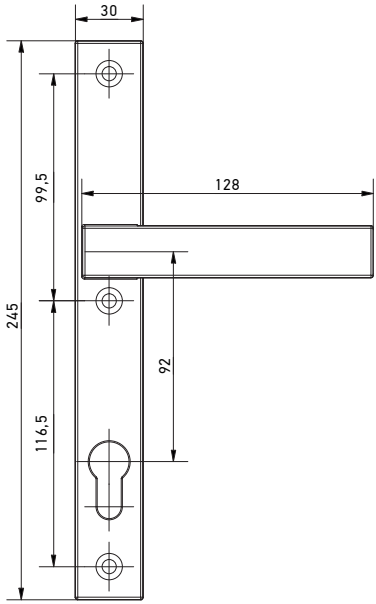

Door handle set «Astrum», 30 mm, for a door cylinder

DOOR LINE DL

Part No.	Door leaf thickness, mm	Center distance, mm	Plank width, mm	Color
D8009-92-N01M	55-82	92	30	White RAL9016 matte
D8009-92-N02M	55-82	92	30	Brown RAL8022 matte
D8009-92-N03	55-82	92	30	Silver
D8009-92-N07M	55-82	92	30	Black RAL9005 matte
D8009-92-N09M	55-82	92	30	Anthracite RAL7016 matte
D8009-92-N12M	55-82	92	30	Brown RAL8019 matte
D8009-92-N15	55-82	92	30	Gold
D8009-92-N16	55-82	92	30	Bronze matte
D8009-92-N19	55-82	92	30	Anthracite сірий RAL7024

Office door handle, 500 mm

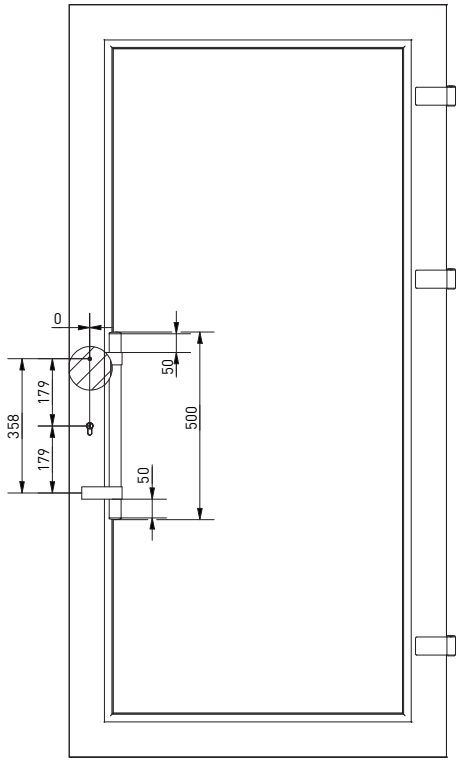

Office door handle, 500 mm

DOOR LINE DL

Part No.	Lenght, mm	Number of brackets, pcs	Color
D8200-05-N01M	500	4	White RAL9016 matte
D8200-05-N02M	500	4	Brown RAL8022 matte
D8200-05-N03	500	4	Silver
D8200-05-N07M	500	4	Black RAL9005 matte
D8200-05-N09M	500	4	Anthracite RAL7016 matte
D8200-05-N15	500	4	Gold
D8200-05-N16	500	4	Bronze matte

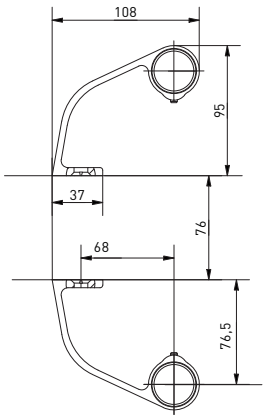

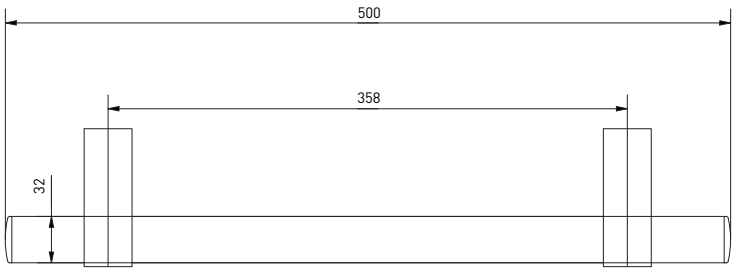

Office door handle, 1000 mm

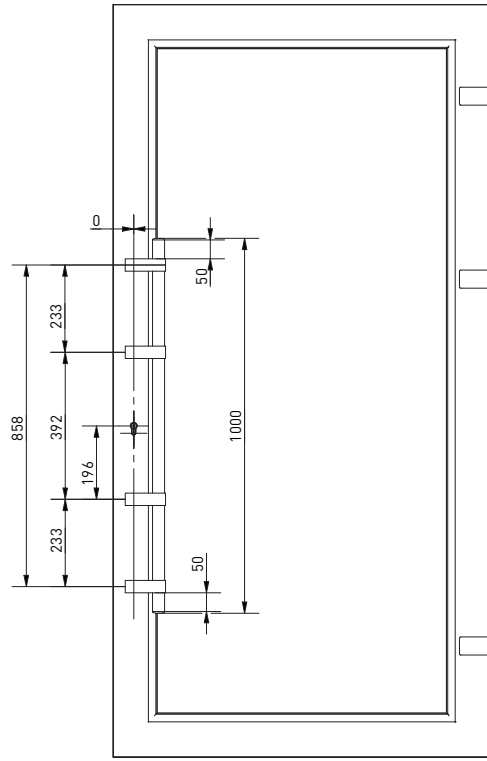

Office door handle, 1000 mm

DOOR LINE DL

Part No.	Lenght, mm	Number of brackets, pcs	Color
D8200-10-N01M	1000	6	White RAL9016 matte
D8200-10-N02M	1000	6	Brown RAL8022 matte
D8200-10-N03	1000	6	Silver
D8200-10-N07M	1000	6	Black RAL9005 matte
D8200-10-N09M	1000	6	Anthracite RAL7016 matte
D8200-10-N15	1000	6	Gold
D8200-10-N16	1000	6	Bronze matte

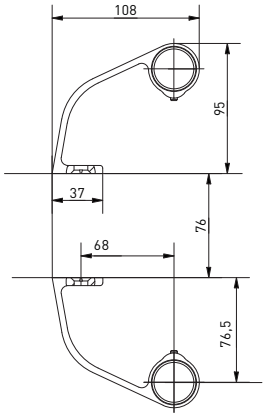

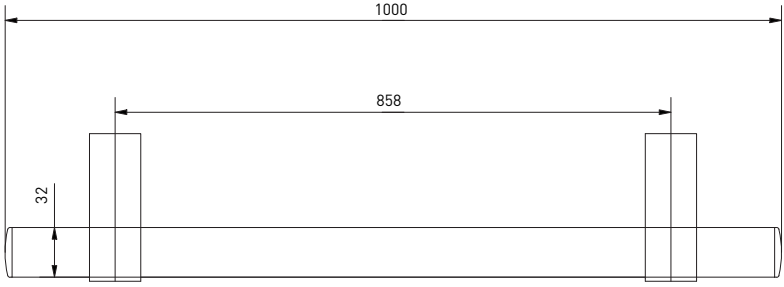

For notes

For notes

AXOR®

axorindustry.com

+38 067 55–42–777

infoaxor@axorindustry.com

instagram.com/axor_live

facebook.com/AxorIndustry